Counter Mounted System Installation Guide

If there is a dispenser currently installed

- Remove the existing unit, both the above and below counter assemblies
- Clean the counter area where the previous dispenser was located
- Verify the size of the existing counter hole is 15/16” to 1-1/4” in diameter

If there is no hole in the counter

- **Prior to drilling,** examine below counter to ensure adequate clearance for the new unit
- Drill a 1” diameter hole in the counter top
- The hole can be drilled to either the right or left of the faucet, ensuring adequate clearance for the below counter assembly
- Clean the counter area where the new hole is located

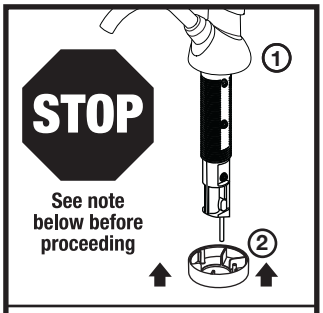

NOTE: If the unit is being installed next to a self-rimming sink, place the spacer ② under the dispenser assembly ①.

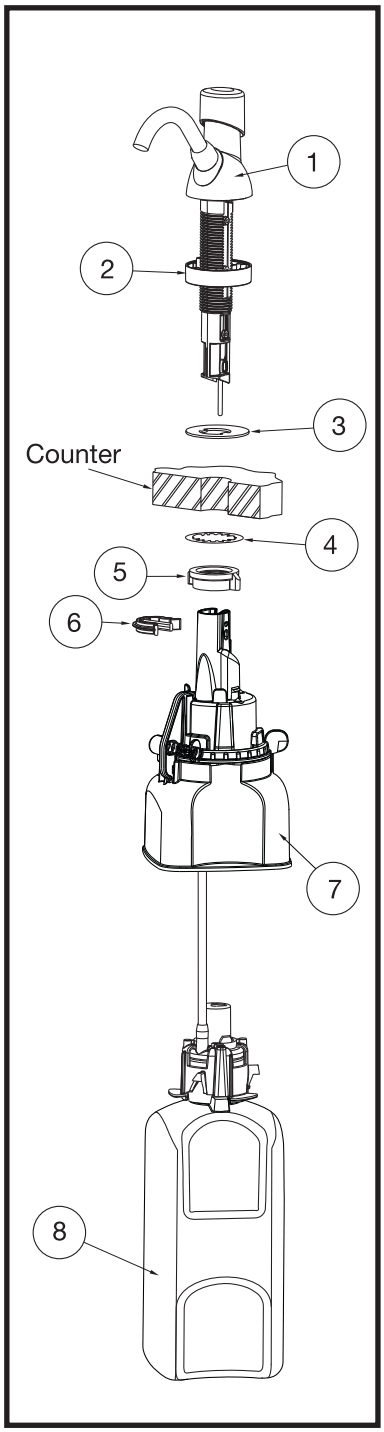

Installing the Counter Mounted System

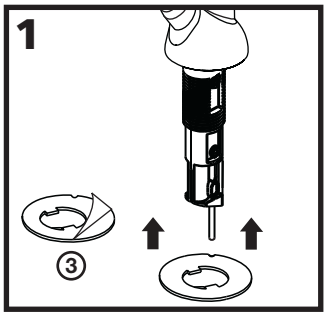

Locate the adhesive gasket ③. Remove the liner from the top of the adhesive gasket and affix to the bottom of the dispenser. Remove the liner from the bottom of the gasket.

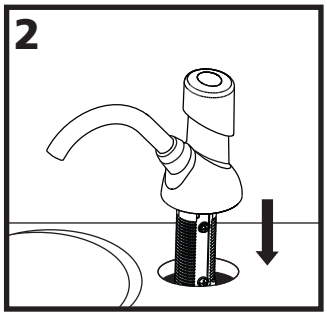

Position the dispenser assembly by guiding the threaded shank through the hole in the counter. Make sure the spout is facing into the sink bowl. Press down firmly on dispenser assembly to ensure it is securely attached to counter.

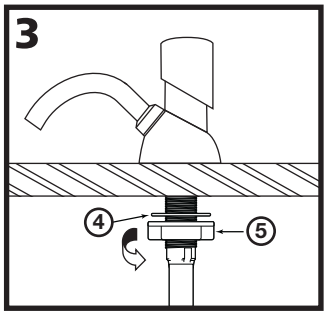

From underneath the counter, secure lock washer ④ and mounting nut ⑤ and tighten to underside of counter.

Refill Installation
(refill sold separately)

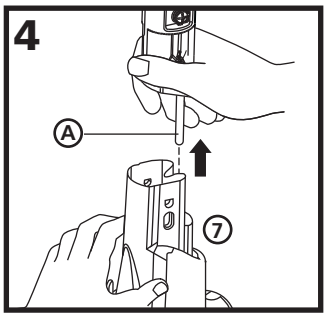

Align the metal rod Ⓐ from threaded shank with small guide hole in the bottle support⑦. Slide the bottle support up onto the rod.

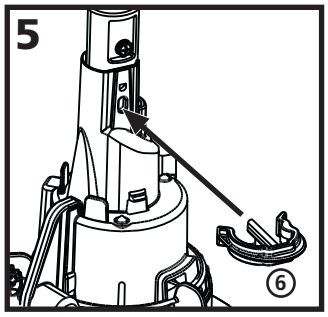

Secure the bottle support to the dispenser assembly by pushing the retaining clip ⑥ into place.

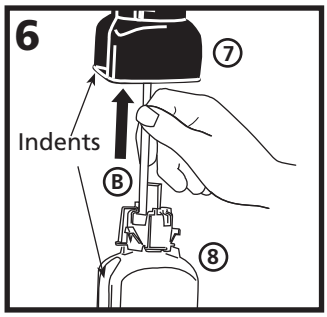

Feed the dispense tube Ⓑ on the refill bottle ⑧ through the bottle support ⑦, aligning the two indents. Slide the refill upward until it snaps into place.

NOTE: The refill is not properly installed until you hear the snap.

ITEM	DESCRIPTION	QTY.
1	DISPENSER ASSEMBLY	1
2	SPACER	1
3	ADHESIVE GASKET	1
4	LOCK WASHER	1
5	MOUNTING NUT	1
6	RETAINING CLIP	1
7	BOTTLE SUPPORT	1
8	REFILL BOTTLE	1

Refill Removal

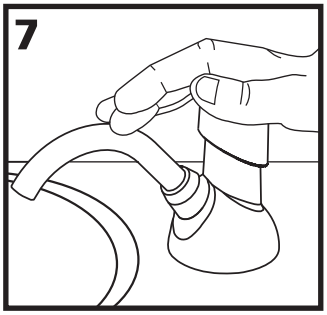

Prime the system by depressing the push button until foam soap is dispensed.

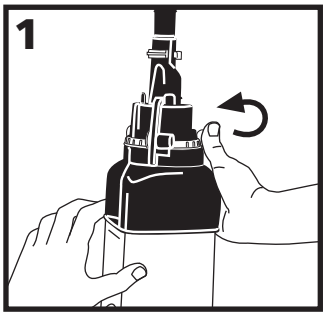

Grasp the empty bottle and use the other hand to push the green latch release to the right.

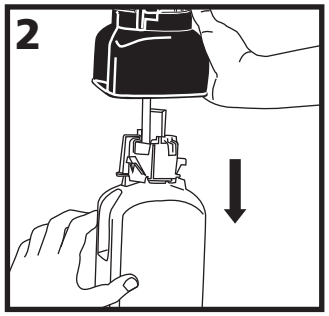

While still pushing the latch release, pull downward on the bottle and remove it from the bottle support.

Cleaning the Counter Mounted System

Use only mild soap and water to clean the counter mounted system.

DO NOT use abrasives to clean the counter mounted system.